450SS

ecosmart+™ Fire

It's tall and it's sleek, and the EcoSmart Fire Firebox 450SS is ideal for customised settings – whether indoor or outdoor. A zero clearance firebox, the 450SS is easy to install, and an ideal tool to create a personalised fireplace.

The long, stainless steel firebox goes well into smaller spaces, but is equally at home in larger areas. Install within cabinetry or with a stone surround; the 450SS can be used with myriad materials and in myriad ways. To complete the fireplace, the ventless EcoSmart Fire Burner is simply inserted into the firebox once securely positioned. And for enhanced safety, the 450SS features a toughened glass screen.

External Dimensions	H 1081mm W 546mm D 356mm H 42.6in W 21.5in D 14.0in
Internal Dimensions	H 900mm W 450mm D 330mm H 35.4in W 17.7in D 13.0in
Weight	27.1kgs, 59.7lbs
Materials	Brushed Stainless Steel, Toughened Glass
Application	Indoor & Outdoor
Compatible Burners	BK Series

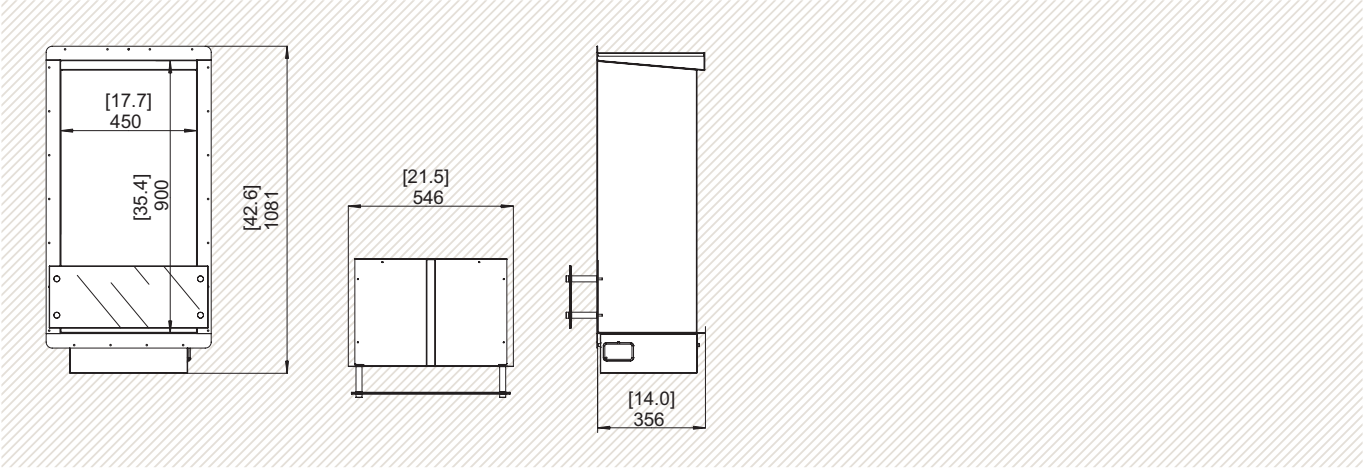

© Copyright 2004 - 2011 The Fire Company Pty Ltd. All rights reserved. V1 130911